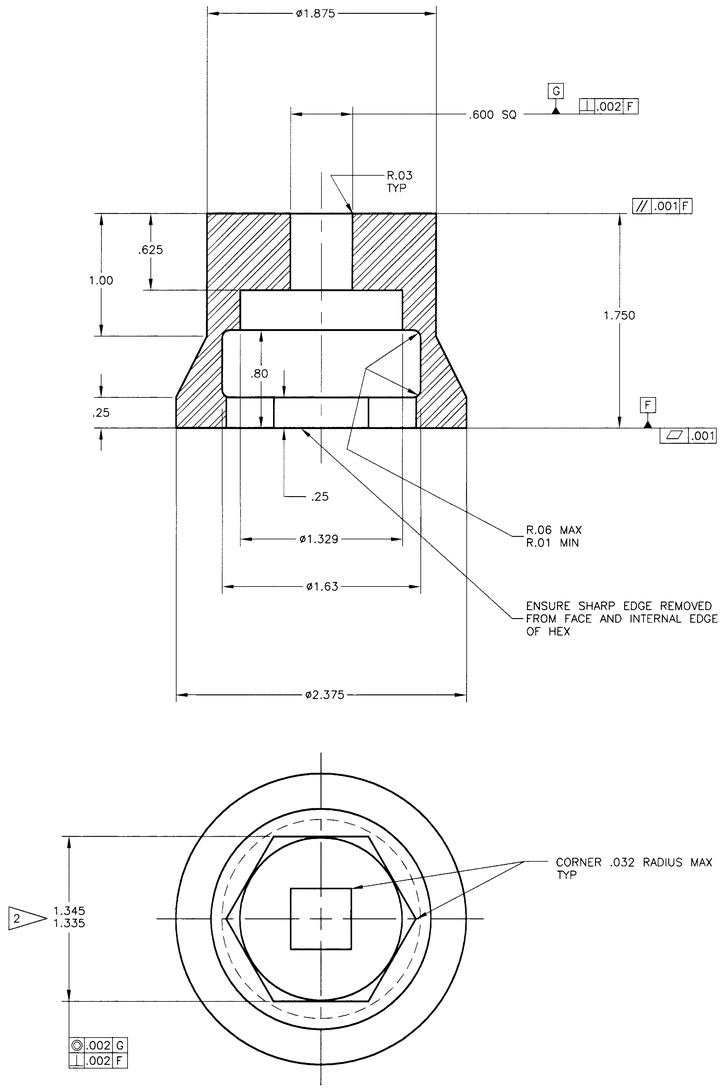

NOTES: (FOR THIS SHEET ONLY)

1. SEE SHEET 1 FOR GENERAL NOTES AND PARTS/MATERIALS LIST.
2. HEX CONFIGURATION APPLIES ONLY TO THE .25 THICK SECTION THE SOCKET.

25/2 FLANK DRIVE SOCKET
SCALE: 2:1

JUL 02 2001
DATE:
STA: #14
HANFORD RELEASE
16

DIMENSIONING AND TOLERANCING SHALL BE INTERPRETED PER ASME Y14.5M-1994
DIMENSIONS ARE IN INCHES UNLESS OTHERWISE SPECIFIED

UNSPECIFIED TOLERANCES SHALL BE:

DECIMAL .X±.1 .XX±.01 .XXX±.005

FRACTIONAL ± 1/16 ANGULAR ± 1°

ALL IMPLIED 90° ANGLES SHALL BE PERPENDICULAR WITHIN THE GREATEST TOLERANCE OF THE LINEAR DIMENSIONS

ALL COAXIAL FEATURES SHALL BE CONCENTRIC WITHIN .032 DIAMETER, UNLESS OTHERWISE SPECIFIED.

GENERAL SERVICE
(EXCEPT AS NOTED SAFETY SIGNIFICANT FOR CONFINEMENT PURPOSES)

DWG NO	TITLE	REF NUMBER	TITLE
		H-2-116004	DRAWING INDEX
DRAWING TRACEABILITY LIST		REFERENCES	
		NEXT USED ON	

MFD	REV NO	DESCRIPTION	REV BY DATE	ENGR	COMPANY
REV REL		REVISIONS			

NAME	DATE	COMPANY
DRAWN BY H. MILLER	6/01	FH
J.A. McClellan	6/26/01	FFS
D.M. Clark	6/27/01	FFS
DESIGN AUTHORITY A.A. Kreg	6/27/01	FH

U.S. DEPARTMENT OF ENERGY
Richland Operations Office

CSB MCO PORT NUMBER 2
VALVE OPERATOR
DETAILS

SIZE	BLDG NO	INDEX NO	DWG NO	REV
F	212H	8407	H-2-120437	0

SCALE AS NOTED EDT 632107 SHEET 8 OF

DOE_TB_F.DWG (01-01)

DWG NO H-2-120437 SH 8 OF REV 0