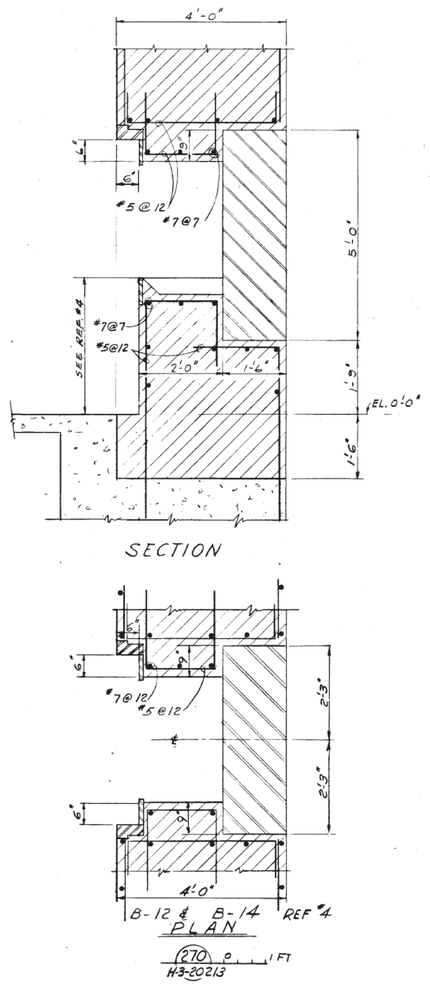

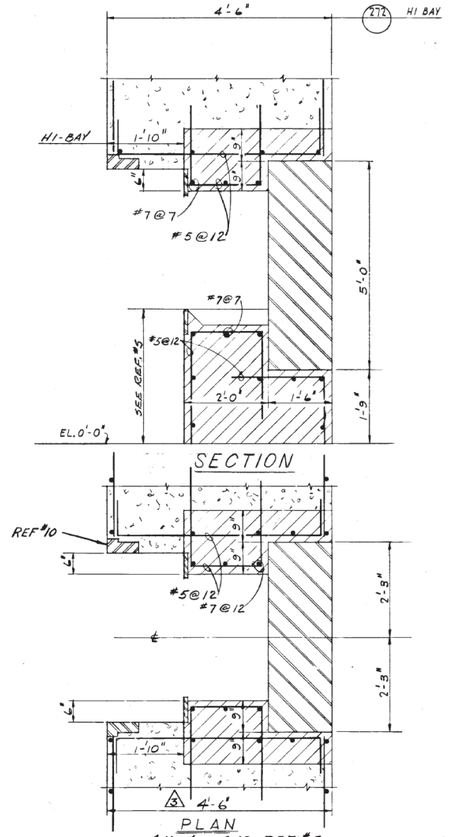

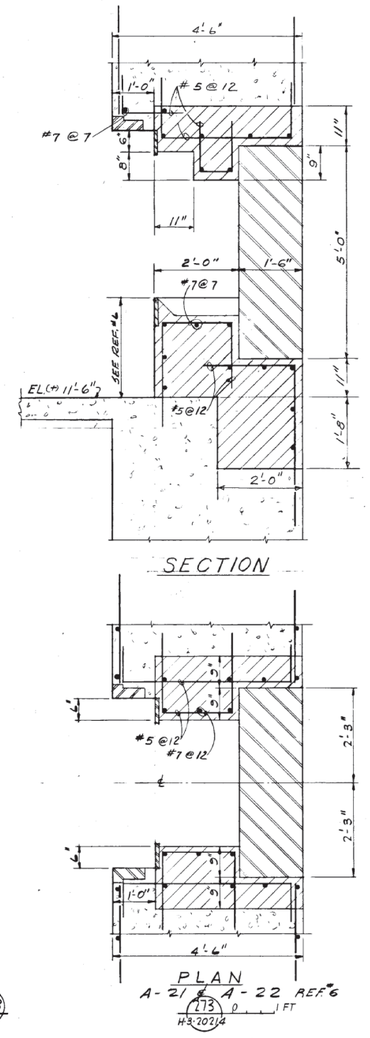

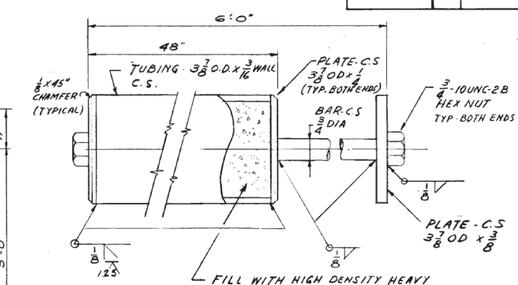

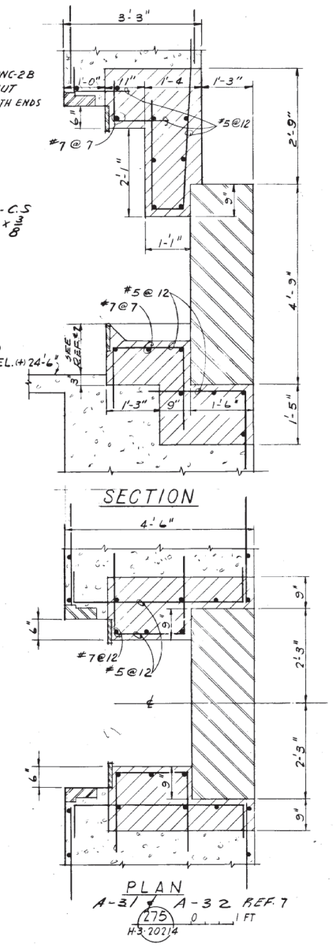

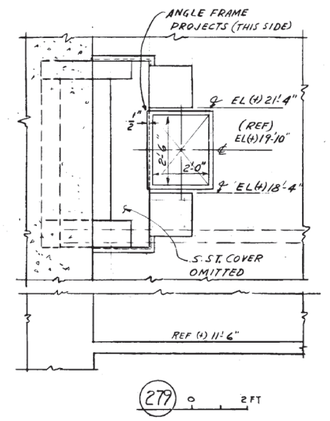

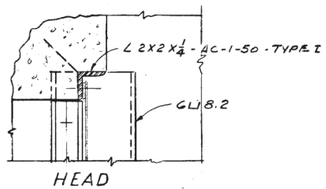

NOTES:
1. REF CUBICLE DWGS AS NOTED FOR PENETRATIONS & ITEMS EMBEDDED IN CUBICLE SHIELDING CONC.

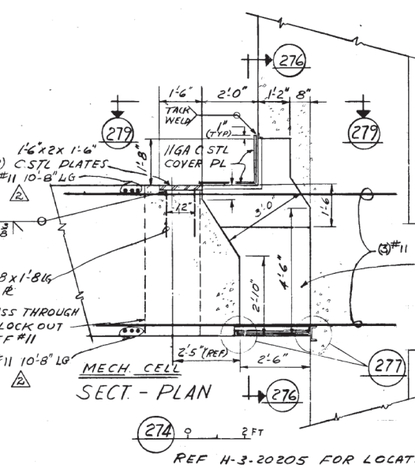

REF H-3-20205 FOR LOCATION

COVER PLATES & EXPOSED FRAMING SHALL BE PAINTED WITH CRP 1 AS PER HWS. SPEC. REF 9. COLOR TO MATCH ADJACENT WALLS (TYPICAL)

INTERIOR SHALL BE FILLED WITH CONC BRICK WITH JOINTS STAGGERED VERT. & HOR. SUCH THAT THERE ARE NO CONTINUOUS CRACKS BEYOND LIMITS OF ONE BRICK COURSE. MORTAR OR GROUT JOINT BETWEEN BRICK LAYER AND WALL SURFACES OR CEILING.

AIR LOCK

LOW BAY CELL

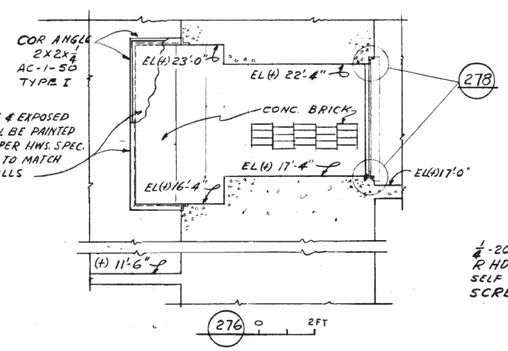

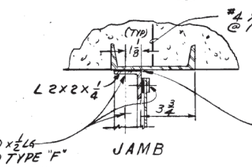

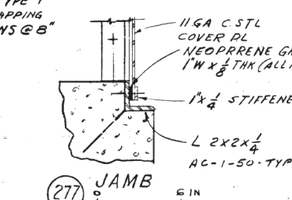

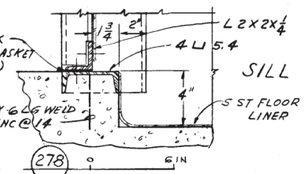

H-3-20215 | 2

LEGEND
- = REGULAR CONCRETE
- = HIGH DENSITY CONCRETE
- = METAL

NO.	DESCRIPTION	REV. BY DATE	APP'D BY	FOR	DATE
	CHECKED FOR AS-BUILT DIMENSION WAS 5'-4" (Zone E-5)				
2	ADDED RESTEEL H-1, G-2			VITRO	2/14/64
1	REVISED NOTE (ZONE H-4)				

REVISIONS

REF. NO.	DWG. NO.	DRAWING TITLE
11	H-3-20216	CELLS SECT & DETS AREA 3 & 4
10	H-3-20243	CUBICLE SHIELDING DOORS
9	HWS 5967	CONST. SPECIFICATIONS
8	H-3-20262	CUBICLE ACCESS DOOR
7	H-3-20256	S & S CUBICLES A-31 & A-32
6	H-3-20255	S & S CUBICLES A-21 & A-22
5	H-3-20254	S & S CUBICLES A-11 & A-12
4	H-3-20250	S & S CUBICLES B12 & B14
3	H-3-20214	SECTIONS & DETAILS - H.P. CELLS
2	H-3-20213	SECTIONS & DETAILS - H.P. CELLS
1	H-3-20150	DRAWINGS LIST

REFERENCE DRAWINGS

NEXT USED ON

CHECK PRINT | COMMENT PRINT

APPROVED FOR CONST. | APPROVED FOR PURCHASE | APPROVED FOR DESIGN

SCALE: SHOWN

DRAWN: R. J. HINES

CHECKED: R. J. Hines

TRACED: Carl Bailey

DES. ENG.: R. J. Hines

PROJECT: CAH-916 | INST. NO. 12479

SUBMITTED BY: Kline Ley

CLASSIFICATION: NONE

U. S. ATOMIC ENERGY COMMISSION
HANFORD ATOMIC PRODUCTS OPERATION
GENERAL ELECTRIC

STRUCTURAL CONCRETE
HOT PILOT CELLS
CUBICLE SECTIONS & DETAILS
AREA 3

FUELS RECYCLE PILOT PLANT

BLDG. NO. 324 | INDEX NO. 0901

DWG. NO. H-3-20215 | SHT. NO. | SHEETS