QTY.	FT. NO.	DESCRIPTION

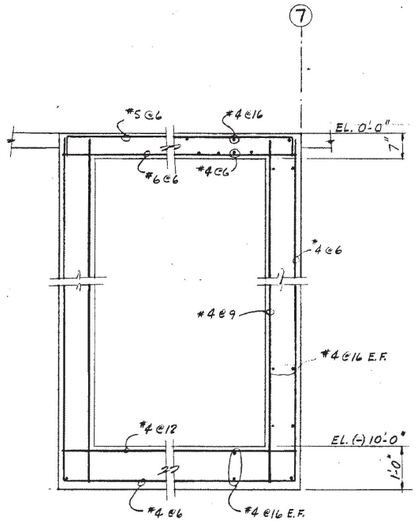

450 0 1-FT.
H-3-20193 -20198

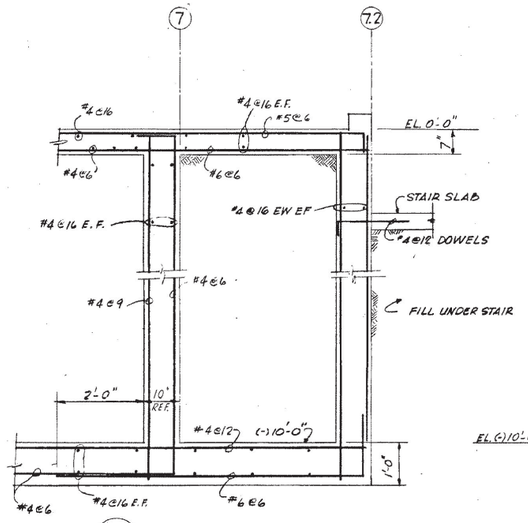

1 451 0 1-FT.
H-3-20193,-20198-20263-20264

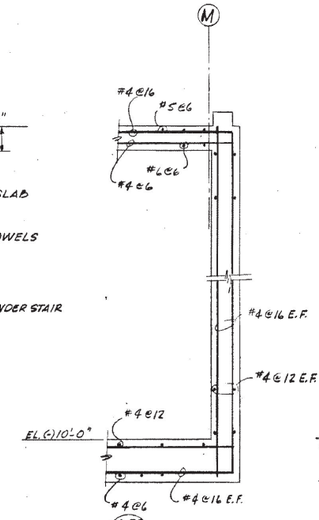

452 0 1-FT.
H-3-20193,-20198

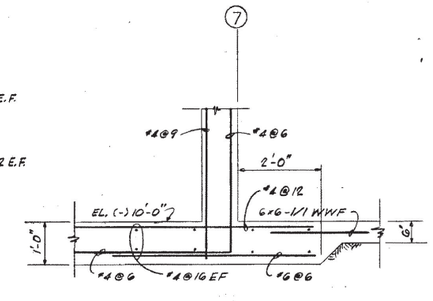

1 53 0 1-FT.
H-3-20263

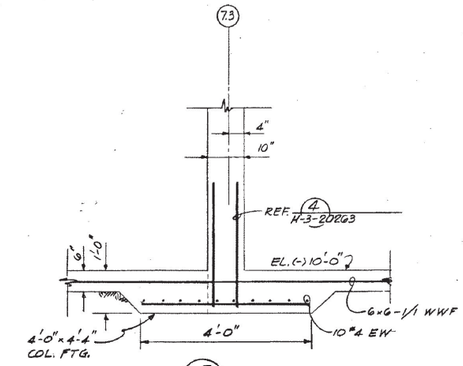

1 54 0 1-FT.
H-3-20263

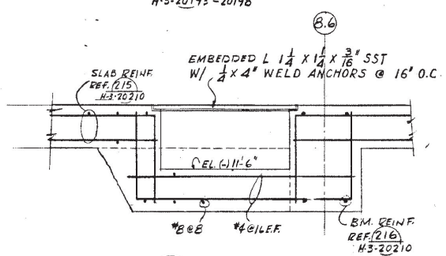

455 0 1-FT.
H-3-20193

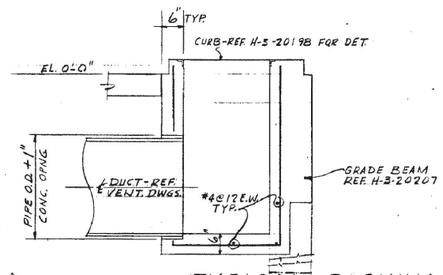

TYPICAL PLENUM DETAILS

SCHEDULE		
PLENUM NO.	STRUCT. DWG.	VENT. DWG.
H-10	H-3-20200	H-3-20392
A-1	H-3-20201	H-3-20393
A-4	H-3-20201	H-3-20393
A-6	H-3-20201	H-3-20394
D.h-10.5	H-3-20202	H-3-20394
C.b-10	H-3-20202	H-3-20394
C.b-9.6	H-3-20202	H-3-20394
D.h-9.6	H-3-20202	H-3-20394

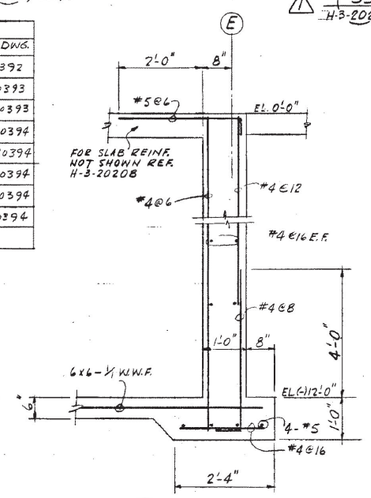

458 0 1-FT.
H-3-20196-20201

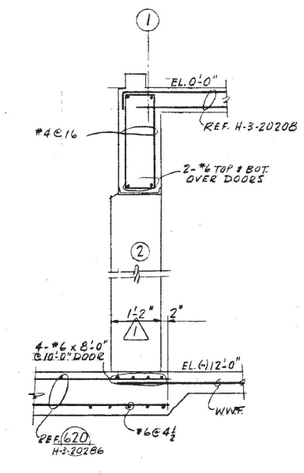

459 0 1-FT.
H-3-20196-20201

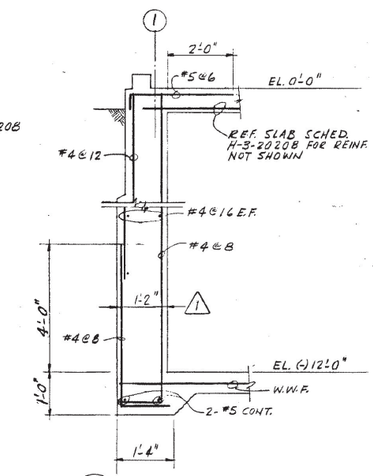

460 0 1-FT.
H-3-20196-20201

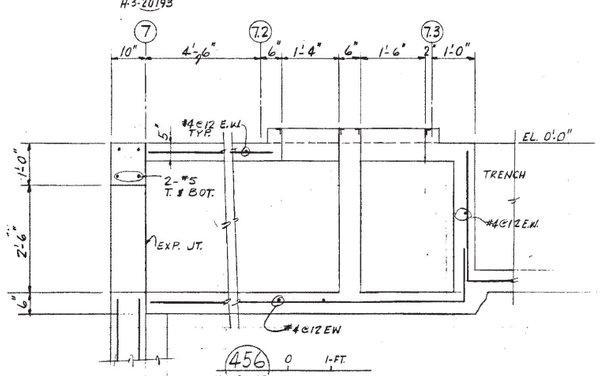

456 0 1-FT.
H-3-20198

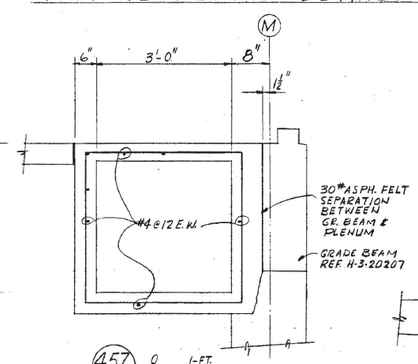

457 0 1-FT.
H-3-20198

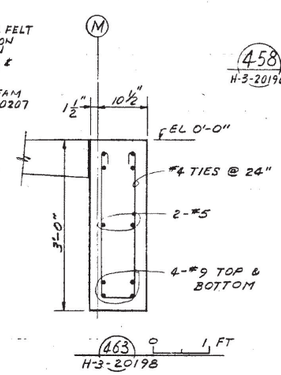

463 0 1 FT
H-3-20198

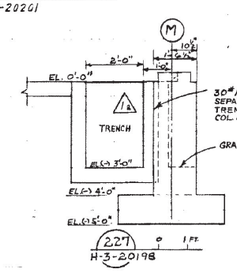

227 0 1 FT.
H-3-20198

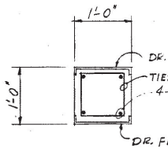

461 0 1-FT
H-3-20196

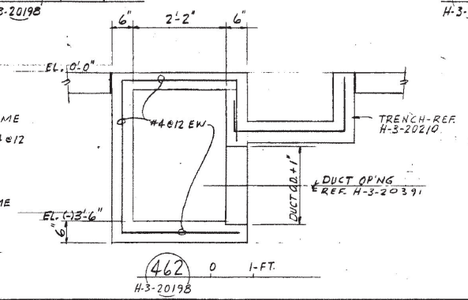

462 0 1-FT.
H-3-20198

NO.	DESCRIPTION	REV. BY DATE	APP'D BY	FOR	DATE
1	ADDED DET. IN. 8-9, CHK. AS-BUILT, REV. DETAIL 451 (COL 7.2 (a) THICKNESS SEC. 453 & 260, 54, CHANGED DIM OF WALL 453 & 454, ADD SEC 53 & REV. SEC. 451, DELETE SEC.	VITRO H.T.W. 12-16-65			

REVISIONS

REF. NO.	DWG. NO.	DRAWING TITLE
	H-3-20264	STRUCT. PLAN CHG. AREAS 1 & 3
	H-3-20263	BSMT. PLAN, AREA 1 & 3
	H-3-20150	DRAWING LIST

REFERENCE DRAWINGS

NEXT U.I. R'D ON

CHECK PRINT	COMMENT PRINT	APPROVED FOR CONST. BY / FOR / DATE / REV.	
ISSUE NO. / DATE / ISSUE NO. / DATE			
SCALE SHOWN		APPROVED FOR PURCHASE BY / FOR / DATE	
DRAWN G. GUNN	DATE 1-21-62	APPROVED FOR DESIGN BY / FOR / DATE	
CHECKED	DATE 7/1/62		
ISSUED	DATE 5/18/62		
DSR. ENG. C.C. Steele	DATE 5/24/62		
PROJECT CAH-916	INST. NO. 12479		
CLASSIFIED BY R. Keeling		CLASSIFICATION NONE	
DATE 6/26/62			

U. S. ATOMIC ENERGY COMMISSION
HANFORD ATOMIC PRODUCTS OPERATION
GENERAL ELECTRIC

STRUCTURAL CONCRETE SECTIONS & DETAILS

FUELS RECYCLE PILOT PLANT

BLDG. NO. 324 INDEX NO. 0901

DWG. NO. H-3-20209 REV. NO. / SUBSHTS.

H-3-20209 SHEET / REV. 1